Bothalia 12, 3: 547–553 (1978)

Miscellaneous ecological notes*

VARIOUS AUTHORS

A FIRST SAVANNA DECOMPOSITION MODEL†

A model of decomposition processes taking place in *Eragrostis pallens—Burkea* Tree Savanna (Coetzee *et al.*, 1976) in the northern Transvaal was developed during the modelling workshop held by the South African Savanna Ecosystem Project in January 1977 (Morris, 1977). The objects were to model the rates of successive breakdown and of nutrient release from tree-leaf litter falling under trees and the main factors affecting this. Mass was used as the currency of the model which simulated a multi-year period with an iteration time of two weeks, starting from the 1st August of the first year. As a working model had to be completed within a week a larger than normal number of assumptions were made and also a number of small programming and logic errors were not discovered until after the workshop. It is intended to correct these errors and to refine and expand the model in the near future to make it more realistic. This Note describes the model as it was produced during the workshop.

Four general assumptions were made for the purpose of the model: (1) the annual input of tree-leaf litter is constant; (2) tree-leaf litter is composed of the following five organic compounds only: sugar, protein, cellulose, hemicellulose and lignin; (3) four stages, namely, input, recognizable fragments, gunge and humus are recognized in the decomposition process; and (4) averaged over two-weekly periods, the mean two-weekly air temperature and the mean two-weekly moisture content of the top 10 cm of the soil profile are, respectively, the only controlling factors of the physiological responses of animal and plant organisms. Four assumptions were made about the termites on the study area, namely: (1) termites do not eat whole leaf litter; (2) termites eat neither gunge nor humus; (3) at the recognizable fragments level, all cellulose, hemicellulose and lignin consumed by termites is passed out unchanged in a form comparable with non-humic acids and, further, all protein is converted into termite biomass and all sugar is used for respiration; and (4) all termite species respond equally to the effects of air temperature. The following assumptions were made about litter decomposition by micro-organisms: (1) all sugar is lost from the system before the humus level; (2) the only sink for sugar is carbon dioxide; (3) in calculating mass at each level, the input of oxygen and hydrogen is disregarded; and (4) at 60% of field capacity all micro-organisms have their optimum level of activity. Some of these twelve assumptions are patently incorrect while others will need modification once the biology of termites and micro-organisms in savanna are better understood. They had to be made because so little is known of these processes.

Four levels of litter decomposition (Fig. 1) were recognized, namely: (1) initial level, consisting of recently-dead leaves which have just been added to the leaf litter layer; (2) recognizable fragments level where the material is still recognizable as leaf material; (3) gunge level where the material can be recognized as vegetable material but no longer as leaf; and (4) humus level which consists of colloidal organic matter only. The components of the humus level are humic acids (HA) and non-humic acids (NH). A fifth "level", consisting of inorganic nutrients (NU) was recognized. These nutrients were considered to be the end stage of decomposition. At each of the first three levels (i=1, 2, 3), five fractions were identified (see Fig. 1), namely: sugar fraction (S_i); protein fraction (P_i); cellulose fraction (C_i); hemicellulose fraction (H_i); and lignin fraction (L_i). Breakdown of these fractions was to humic acids and non-humic acids at the humus level from which nutrients were leached. The following sinks were incorporated into the model: (1) protein at the recognizable fragments level (P_2) was used to build termite bodies (TB); (2) during all decomposition, CO_2 and H_2O were produced (CH); (3) some nutrients from NU were taken up by plant roots (RT); and (4) some nutrients from NU were leached from the soil (LC). Coefficients for the transfer of mass from a variable to another were obtained from Ausmus & Witkamp (1975).

The behaviour of the model was controlled by five functions. Litter input is shown in Fig. 2a. There is no input from August until the end of April. In May there is an input of 30g and in June and July inputs of 50g litter each month. Linear air temperature fluctuations from 12°C in August to 25°C in January and back to 12°C in July are illustrated in Fig. 2b. A linear fluctuation in field capacity from 40% in August to 43% in January and then back to 40% in July was used (Fig. 2c). During a sensitivity analysis of the model drier winter soils (5%) and wetter summer soils (95%) were used. The effects of both air temperature and field capacity on the organisms were scaled in arbitrary units from zero to one. Thirty degrees was the optimum temperature chosen for termite activity (Fig. 3a) with fairly sharp decreases in activity at higher and lower temperatures. The optimum field capacity was taken to be 60% with waterlogging, at higher moisture contents, and desiccation, at lower moisture contents, reducing the rate of decomposition (Fig. 3b).

A standard run of the model over four seasons is illustrated in Fig. 4, starting at the time of first input of litter. A gradual build-up of NH, HA, and NU was apparent. The annual peaks of NH and NU occurred when litter was roughly at its lowest level while the small annual peak of HA occurred a little later than the NH and NU peaks each season. The system at Nylsvley, where the field research is taking place, is considered to be stable as regards nutrients, i.e. the soil is being neither enriched nor depleted in the long run. Thus we expected, but did not find, the same maxima and minima for nutrients each year. The gradual increase indicates that either our coefficients were not right or that some other factor, like fire, has been excluded from our model.

* Editor's note: this is a new feature of Bothalia meant to cater for short ecological notes not constituting full papers; contributions from ecologists are welcome.

† This paper is a publication of the South African Savanna Ecosystem Project.

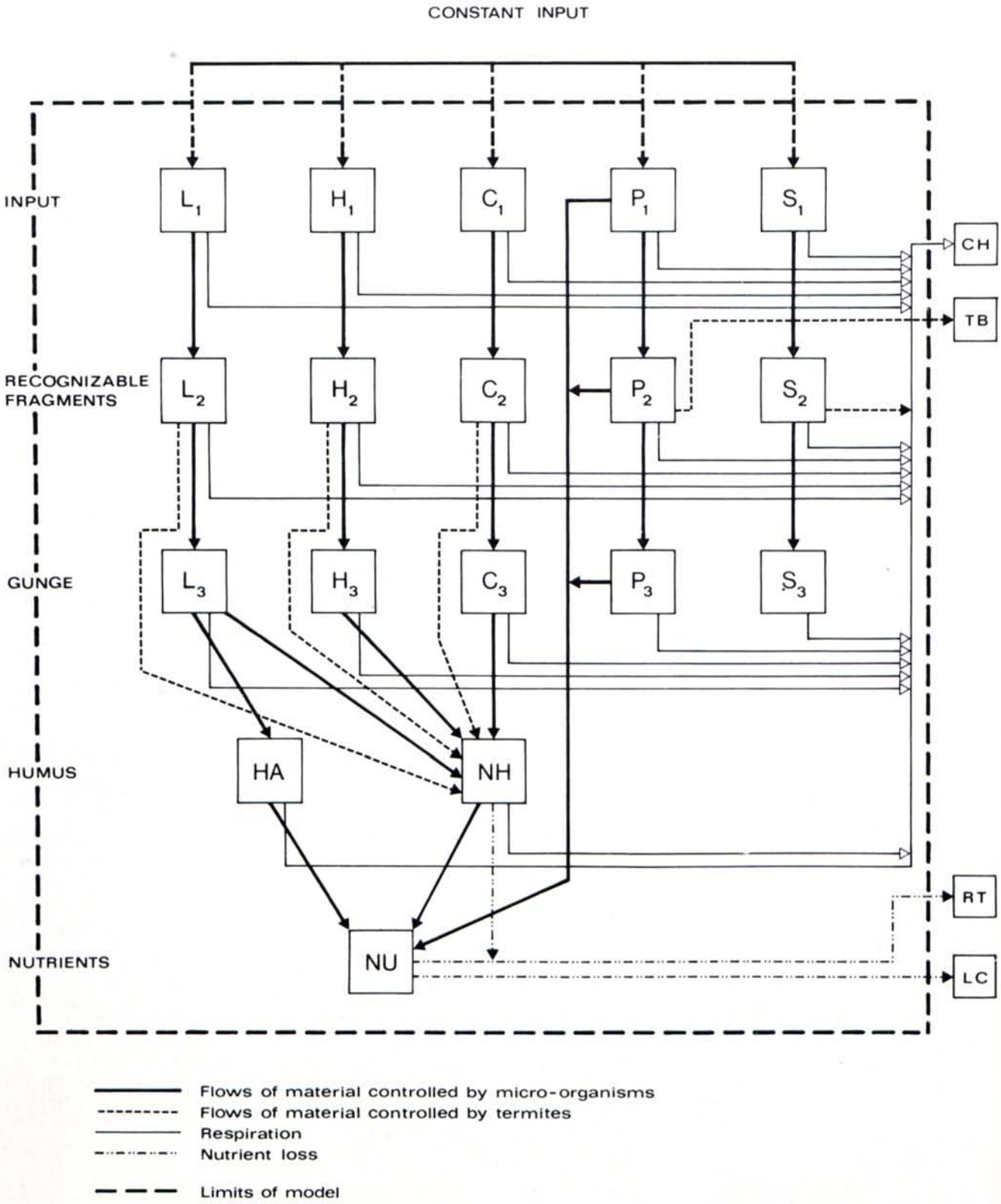

FIG. 1.—Diagrammatic representation of decomposition model.

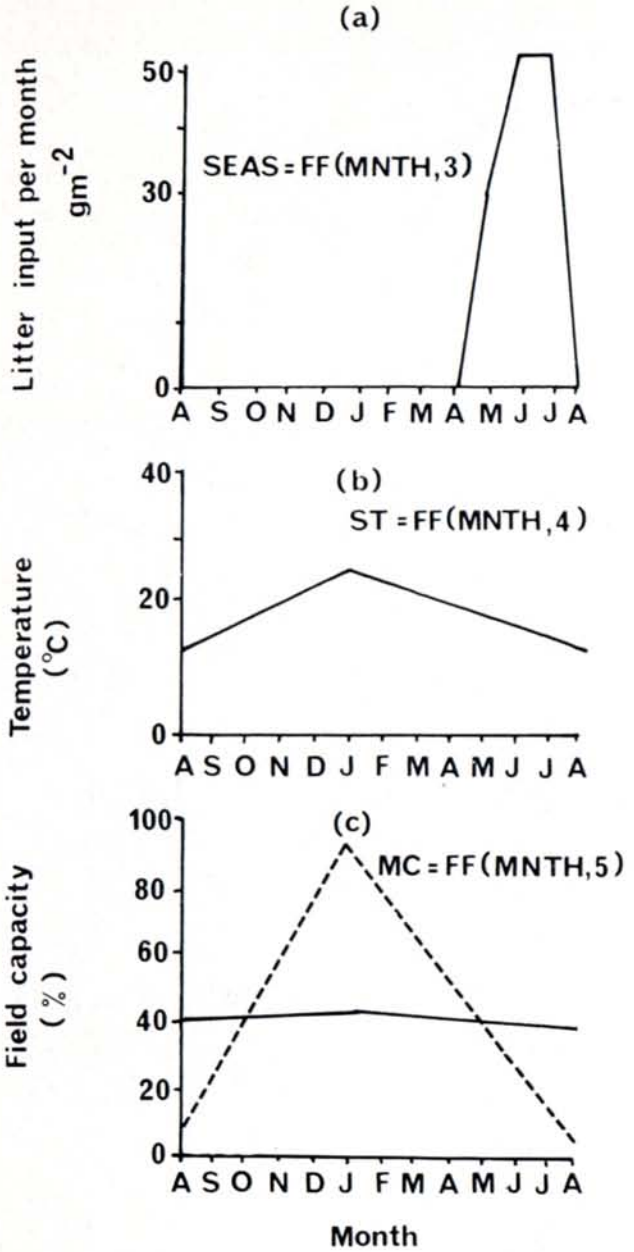

FIG. 2.—Time-dependent functions regulating annual input of litter and decomposition processes. Origins of all three X-axes are 1st August.

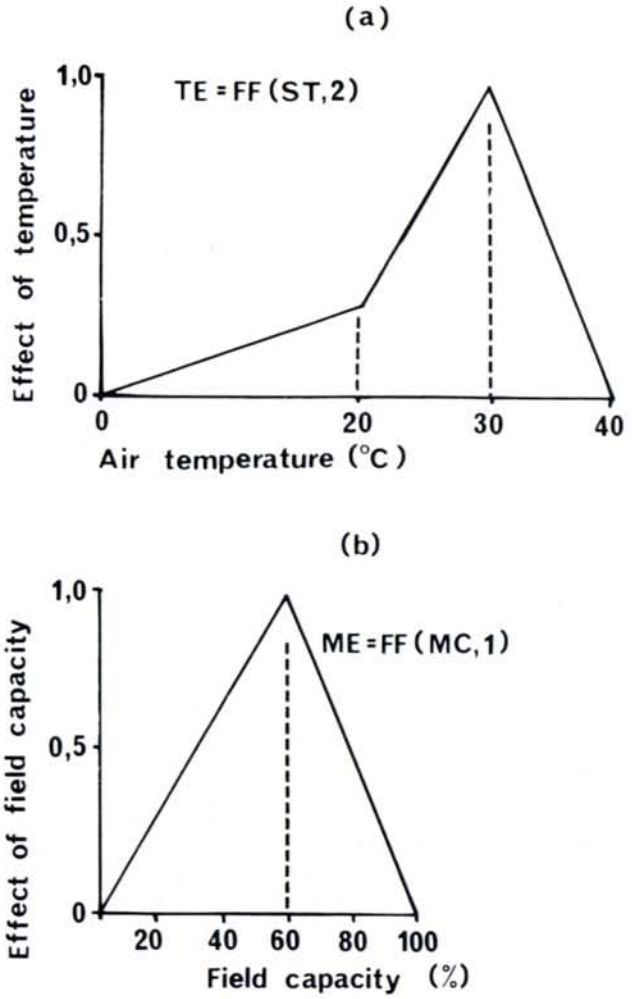

FIG. 3.—Functions illustrating effect of air temperature and field capacity on the rates of decomposition processes.

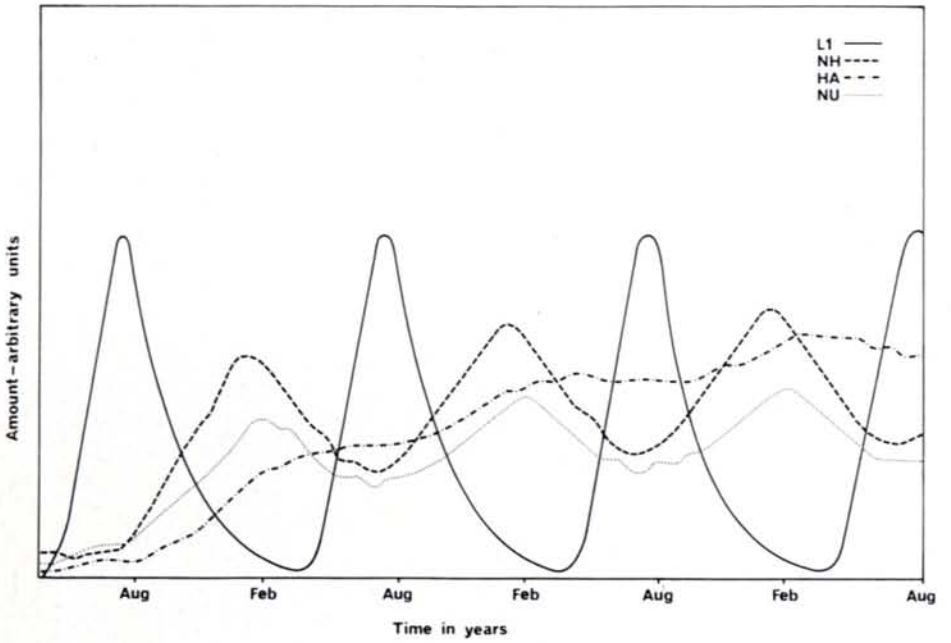

FIG. 4.—Standard run of model from first litter input to fourth year. Time (in years) represented on x-axis and amount (in arbitrary units and various scales) on y-axis. LI = litter input, HA = humic acids, NH = non-humic acids and NU = nutrients.

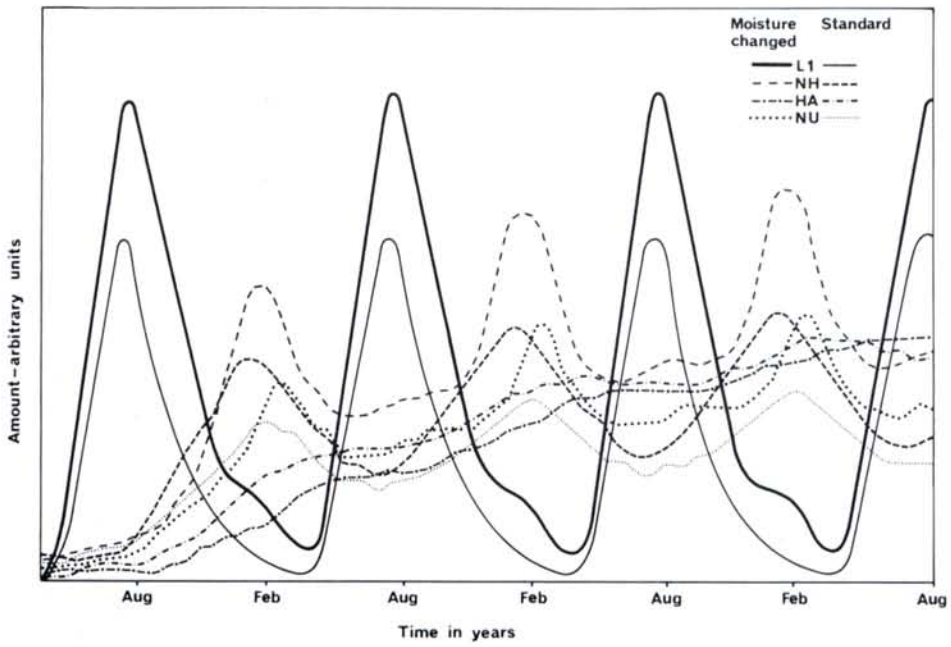

FIG. 5.—Superimposed standard run and run with moisture function changed. See Fig. 4 for further explanation.

FIG. 6.—Litter bags with three mesh sizes (see arrows) containing *Ochna pulchra* leaves for the determination of mass loss and change in chemical composition of litter at Nylsvley.

A sensitivity analysis of the model was begun by varying one function and a few parameters, one at a time. Although a number of our assumptions could have been tested at this stage, limited time prevented a more complete sensitivity analysis of the model. The following modifications were made: (1) Increased leaching and less root uptake. The leaching coefficient was increased from 0,375 to 0,75 and the root uptake coefficient was decreased from 0,625 to 0,5. There was no effect on the levels of HA and NH. The level of NU decreased, showing that the decrease in root uptake did not balance the increase in leaching. (2) Termites consume 35% of recognizable fragments level. Instead of taking a maximum of 25% of the recognizable fragments, it was assumed that termites could take 35%, provided that temperatures were high enough. NH, HA and NU showed the same pattern of seasonal fluctuation as before but the level of HA decreased and NH increased. This happened because termites were assumed to transfer recognizable fragments to NH instantaneously after consumption, and not to transfer any to HA. Thus, relative to micro-organisms, the input to NH was greater and to HA less. The level of NU was also greater because both NH and HA fed into NU and the termites ha increased NH more than they had decreased HA, thus total input into NU was greater. (3) Termites consume 15% of recognizable fragments level. It was found that the result was the exact reverse of the previous analysis. The same reasoning, in reverse, can be used to explain the result. (4) Modification of field capacity function. Drier winter soils and moister summer soils (see Fig. 2c) were used for one run of the model. The graph for litter quantity (input level) was more exaggerated than in the standard run (Fig. 5) because soil moisture effects were increased, both favourably and unfavourably. From July to mid-November the rate of decomposition was faster because the soil was damp and from mid-November to the end of April it was slower because the soil became too dry for rapid decomposition. NH and NU were also higher at all times of the year and HA was slightly higher. The apparent paradox that litter accumulation was greater and yet the output of litter breakdown products was also greater in this run than in the standard run may be explained as follows. Moisture effects slow down (and speed up) the micro-organism steps but not the termite steps (an assumption of model). Overall, the

slowing down of micro-organism activity caused an increase in litter buildup. However, this meant that the percentage taken by termites was increased, and this percentage was instantly reduced to NH (another assumption of model). Thus NH increased because of greater input. NU rose because although the rate of transfer from NH to NU was slower, the larger amount of NH still meant that a greater amount of NU was produced. The HA level increased slightly because the rate of flow from HA to NU (not termite affected) was slower.

It was found that the conceptualization of decomposition processes in a modelling framework, albeit very crude, gave direction and common goals to the researchers participating in this component of the Savanna Ecosystem Project. It improved communication between individual participants and gave fieldworkers an insight into the data requirements of models. Examples which support these statements follow. Litter collected monthly from the study area is being analysed for the five chemical fractions into which it was classified, as well as for other fractions. From the results of these analyses a more meaningful breakdown will be included in the next version of the model. These results will also be used for model validation. A pilot project, started to establish the annual course of leaf and dead wood fall, is being expanded because the importance of litter fall was highlighted by the model. Cooperation between the researcher studying termites and the microbiologist has become more meaningful now that possible decomposition pathways including both termites and micro-organisms have been identified. Research is now aimed at trying to either confirm the assumptions made in this model about the relative roles of termites and micro-organisms or produce new assumptions based on sounder knowledge.

The results presented above are of limited value as they were based on some invalid assumptions and on transfer rates derived from temperate region studies rather than from the study site itself. Although the assumptions are being revised, the model is being re-structured, transfer rates are being derived from Nylsvley experiments (Fig. 6) and literature is being reviewed at present, we consider that this short Note on progress to date with the first South African decomposition model is appropriate.

REFERENCES

AUSMUS, B. S. & WITKAMP, M., 1975. *Litter and soil microbial dynamics in a deciduous forest stand.* Tennessee, Oak Ridge National Laboratories Pub.

COETZEE, B. J., VAN DER MEULEN, F., ZWANZIGER, S., GONSALVES, P. & WEISSER, P., 1976. A phytosociological classification of the Nylsvley Nature Reserve. *Bothalia* 12: 137–160.

MORRIS, J. W. (ed.), 1977. *First modelling workshop—January 1977.* Pretoria. Unpublished report of the Savanna Ecosystem Project.

J. W. MORRIS*, J. BEZUIDENHOUT**, P. FERRAR†, J. CHARMAINE HORNE† and M. JUDELMAN†

* Botanical Research Institute, Department of Agricultural Technical Services, Private Bag X101, Pretoria.

** University of Pretoria, Pretoria.

† University of the Witwatersrand, Johannesburg.

A TABLE OF MAXIMUM ENTROPY VALUES FOR THE ECOLOGICAL PROFILES TECHNIQUE

Use of the ecological profiles technique (Morris & Guillerm, 1974) in South Africa is hindered by the absence of a table of maximum entropy values. These values are required for the calculation of sampling equitability of variables. The shortcoming is remedied by this Note which provides I_{max} for values of K from one to 50 in Table 1 (notation follows Morris & Guillerm, 1974). Thus a variable with five classes, after grouping when necessary, has an I_{max} of 2,322.

TABLE 1.—Maximum entropy values corresponding to 50 values of K

K	I_{max}	K	I_{max}
1	0,000	16	4,000
2	1,000	17	4,087
3	1,585	18	4,170
4	2,000	19	4,248
5	2,322	20	4,322
6	2,585	21	4,392
7	2,807	22	4,459
8	3,000	23	4,524
9	3,170	24	4,585
10	3,322	25	4,644
11	3,459	26	4,700
12	3,585	27	4,755
13	3,700	28	4,807
14	3,807	29	4,858
15	3,907	30	4,907
31	4,954	41	5,358
32	5,000	42	5,392
33	5,044	43	5,426
34	5,087	44	5,459
35	5,129	45	5,492
36	5,170	46	5,524
37	5,209	47	5,555
38	5,248	48	5,585
39	5,285	49	5,615
40	5,322	50	5,644

Maximum entropy of factor L is calculated as:

$$I_{max,\ L} = \log_2 K.$$

For values of K greater than 50 the following formula should be used to calculate maximum entropy:

$$I_{max,\ L} = \log_{10} K.(\log_{10} 2)^{-1}$$
$$= \log_{10} K.\ 3,322$$

REFERENCE

MORRIS, J. W. & GUILLERM, J. L., 1974. The ecological profiles technique applied to data from Lichtenburg, South Africa. *Bothalia* 11: 355–364.

J. W. MORRIS

A FIRST ATTEMPT TO MEASURE TEMPERATURES OF FIRE IN FYNBOS

Veld fire research is being conducted in Cape mountain fynbos, Acocks's (1975) Veld Types 69 and 70, to determine the effect of fire on vegetation and streamflow and to establish how fire should be used in managing catchments. As previous workers (Kenworthy, 1963; West, 1965; and Kayll, 1966) have pointed out, one of the most important things to know about fire is its intensity as expressed by its temperature duration. This may be measured accurately but expensively with thermocouples (Kenworthy, 1963; Kayll, 1966), or indirectly by recording the water loss from blackened metal canisters (Beaufait, 1966). Where inadequate resources preclude duration measurements, temperature measurements alone must